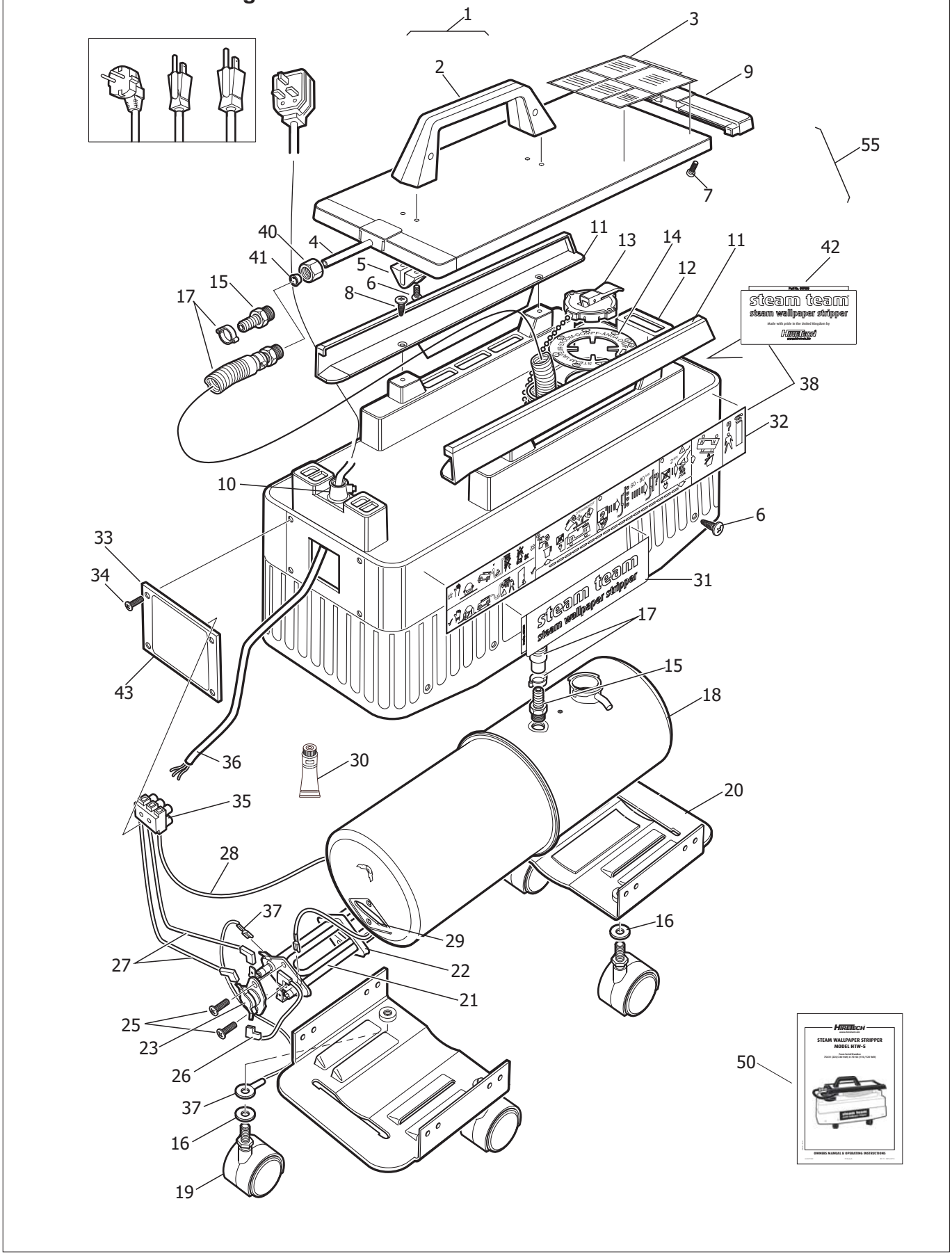All markets excluding North America